https://www.annren.com
e-Mail：sales@annren.com
TEL：+886-6-313-0155 FAX：+886-6-313-0225
No.196-19, Zhonghua Rd., Yongkang Dist., Tainan City 71069, Taiwan

Metal shell connector (RIPTII)

Describe

- 2 POS
- Metal shell
- High Protection Degree：IP6K9K、IP68
- Cable Section：25mm² ~ 70mm²
- After the cable is loaded, the cable will not move up and down, nor will it rotate, so the fixing effect is good
- Mainly used for battery, MCU、, PDU and other equipment

Application

- Current Rating：120A=25mm
  200A=35mm
  250A=50mm
  300A=70mm
- Voltage Rating：1000V DC
- Shield：Option
- Temperture：−40℃ ~ +140℃

Naming rules

R IPTII −2 −70 P −A−TW

- Extension serial number
- P：Shield
- Cable：25、35、50、70
- POS：2
- IPT II:Product Serial
- Product Serial

RIPT II −2−50P−A" means: Recodeal manufacture, IPT II series, two−core, suitable for 50 mm² shielded cable, with shielding, expansion model is A.
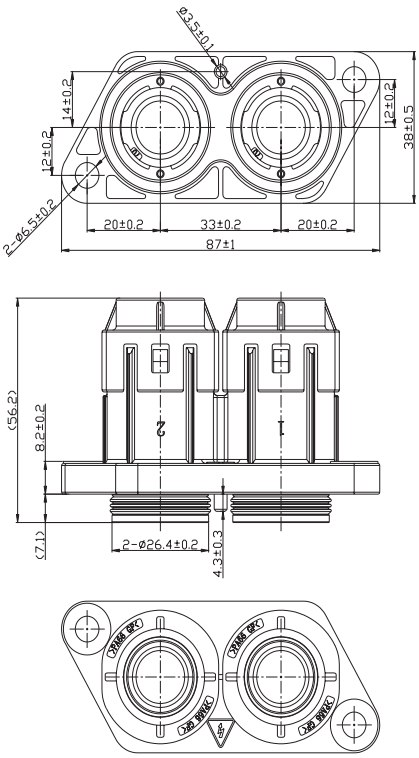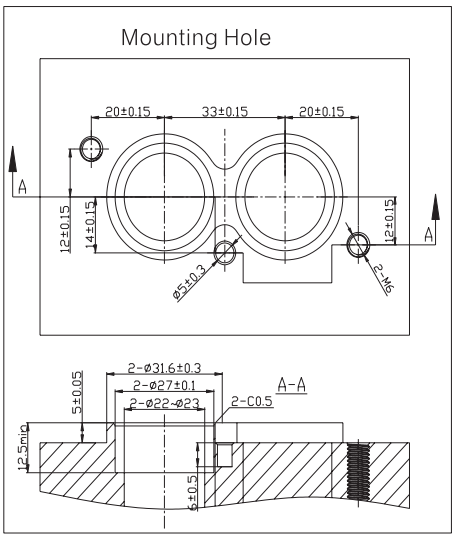
SIZE