R3.653.191013

Note	Rev	Description	Approve	Date	ECN NO.
	S1.0	New Release	Li gao	2023-11-09	

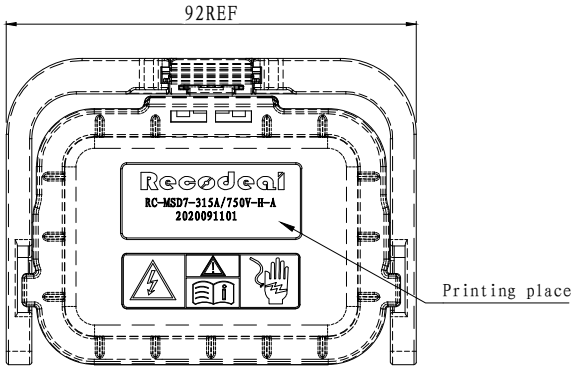

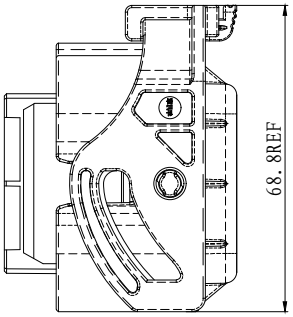

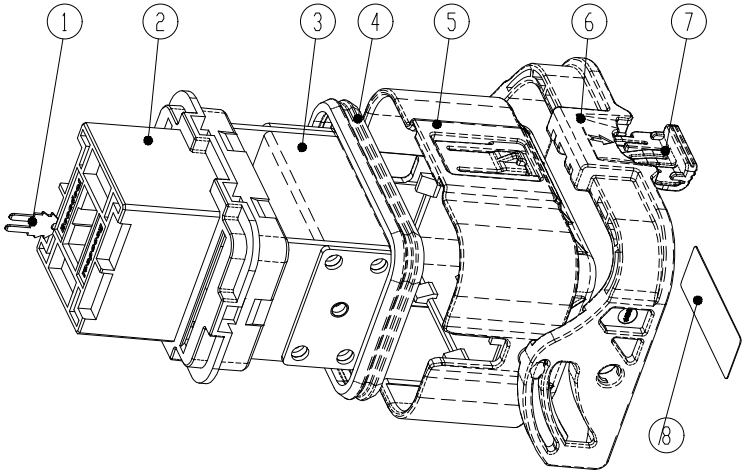

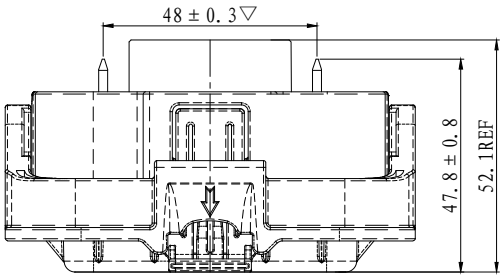

Laser printing requirements:
Printing place:
The position is shown in the figure, the font is bold and bold, and the word height is 2;
Print content: top row of "model" and bottom row of "batch number"; Model: See the work order for details;
Description of batch number: year+month+date+group number.

Order	Unmber	Name	Number	Remarks
8	8.817.191007	Label	1	
7	8.074.191014	button	1	
6	8.074.191013	handle	1	
5	8.074.191009	On the shell	1	
4	8.683.191009	Sealing Ring	1	
3	See table	fuse	1	
2	8.074.191011	Under the shell	1	
1	7.744.191001.04	Interlock the needle	1	without interlocking

Material And Finish

Technical requirements:
1. Working temperature: -40℃ ~+85℃.
2. Protection grade: IP68 (inserted state).
▼3. rated working voltage: 750V.DC.
▼4. Withstand voltage: 3500V.DC 60s, leakage current < 1mA.
▼5. Insulation resistance: 3500MΩ 1000V DC 60s (normal).
▼6. The material meets the environmental protection requirements of RoHS2.0, and the flame retardant grade is UL94-V0.
7. Read the product operating instructions carefully before use.
8. Those marked with '▼' are key features.

Order	Model	Unmber	fuse Unmber
1	RC-MSD7-315A/750V-H-A	3.653.191013.02	7.055.191075

Material: See Notes	Tolerance:		Recodeal Innovation technology						
Finish: See Notes	.0 ±0.25; .00 ±0.15; .000 ±0.05; 0° ±2.00°; .0° ±1.00°		Description	MSD7 is equipped with basman fuse plug					
Dra.	Li gao	Date	2023-11-09	Type	—		DWG NO.	R3.653.191013	
Chk.		Date		Scale	1:1	First Perspective		Rev	S1.0
App.		Date		Unit	mm	Weight	— 9	Page	1/1